District 9C Basketball 2023

District 9C Girls' Basketball Tournament

Havre High School--February 15-17, 2023

Girls" Bracket

Winners advance on the solid lines, losing teams on dotted lines

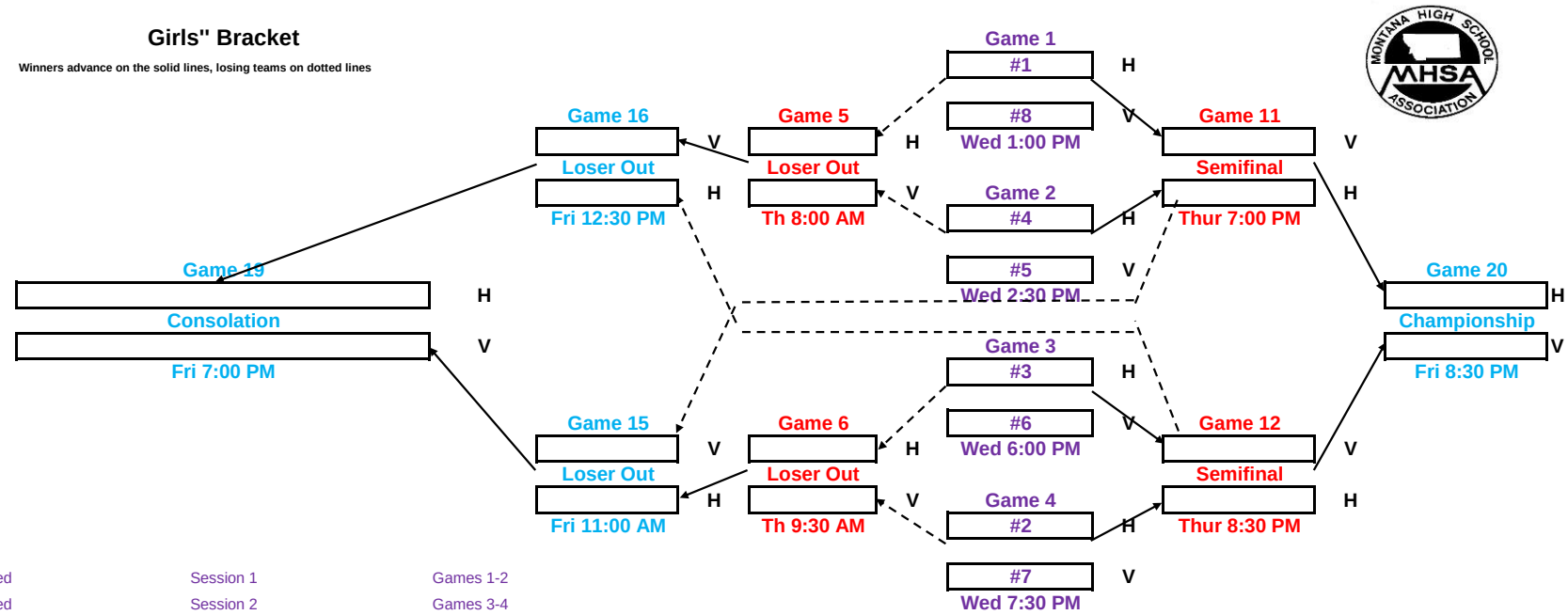

Wed	Session 1	Games 1-2
Wed	Session 2	Games 3-4
Thur	Session 3	Games 5-6
Thur	Session 4	Games 11-12
Fri	Session 5	Games 15-16
Fri	Session 6	Games 19-20